इंटरनेट मानक

Disclosure to Promote the Right To Information

Whereas the Parliament of India has set out to provide a practical regime of right to information for citizens to secure access to information under the control of public authorities, in order to promote transparency and accountability in the working of every public authority, and whereas the attached publication of the Bureau of Indian Standards is of particular interest to the public, particularly disadvantaged communities and those engaged in the pursuit of education and knowledge, the attached public safety standard is made available to promote the timely dissemination of this information in an accurate manner to the public.

"जानने का अधिकार, जीने का अधिकार"
Mazdoor Kisan Shakti Sangathan
"The Right to Information, The Right to Live"

"पुराने को छोड नये के तरफ"
Jawaharlal Nehru
"Step Out From the Old to the New"

IS 1794 (1971): Shuttles for Plain Calico Looms [TXD 14: Machinery for Fabric Manufacture]

"ज्ञान से एक नये भारत का निर्माण"
Satyanarayan Gangaram Pitroda
"Invent a New India Using Knowledge"

Act Number 22 of 2005
The Indian Parliament
RIGHT TO INFORMATION

Made Available By
Public.Resource.Org

"ज्ञान एक ऐसा खजाना है जो कभी चुराया नहीं जा सकता है"
Bhartṛhari—Nītiśatakam
"Knowledge is such a treasure which cannot be stolen"

BLANK PAGE

BRUTUM FULMEN

IGNORANTIA JURIS NON EXCUSAT

PROTECTED BY COPYRIGHT

Second Reprint AUGUST 1987
(Incorporating Amendment No 1)

(Reaffirmed - 2012)

Indian Standard

SPECIFICATION FOR SHUTTLES FOR PLAIN CALICO LOOMS

(First Revision)

Textile Mill Accessories (Other Than Jute) Sectional Committee, TDC 19 Panel for Shuttles and Their Accessories, TDC 19:P1 [Ref Doc TDC 19 (11

1. Terminology

1.1 *Left-Hand Shuttle* — The eye of the shuttle falls on the right hand side when viewed from the weaver's position at the front of the loom

1.2 *Right-Hand Shuttle* — The eye of the shuttle falls on the left hand side when viewed from the weaver's position at the front of the loom

2 **Shape and Dimensions** — As given in Table 1

TABLE 1 A TYPICAL SHUTTLE FOR PLAIN CALICO LOOM

All dimensions in millimetres

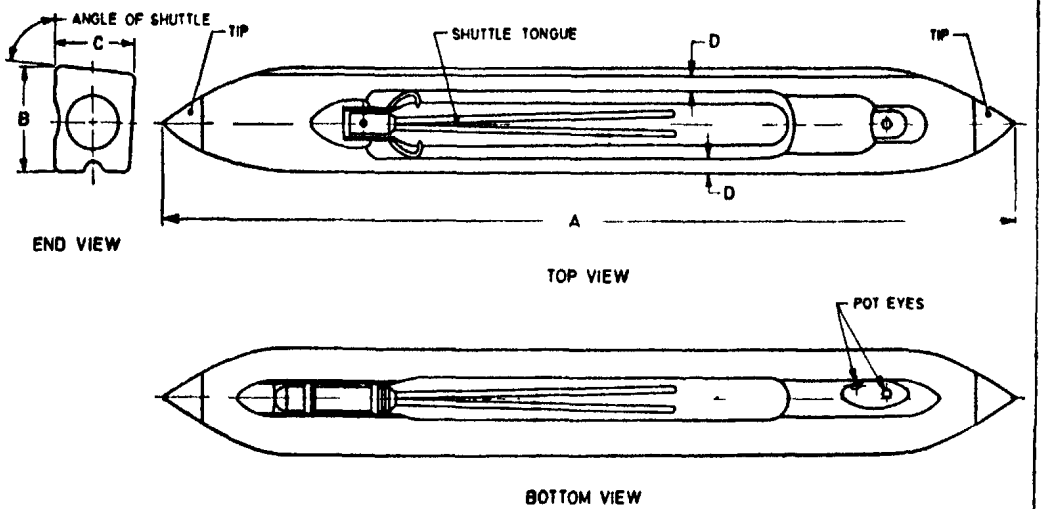

Variety No	Length*	Width at Bottom	Height at Back†	Wall Thickness at Top
	A	B	C	D
(1)	(2)	(3)	(4)	(5)
SP 1	345	41	32	6
SP 2	370	42	34	6
SP 3	370	44	36	6
SP 4	380	44	36	6
SP 5	405	46	37	6
Tolerance	± 2	± 1	± 0.5	± 0.5

Note — In case, an agreement between the buyer and the seller provides for dimensions other than those specified above they shall be declared and shall be subject to the tolerances specified above

*Overall length of shuttle is normally equal to length of the pirn to be accommodated plus 165 mm, *Min*
†The height at front is normally 1 to 3 mm less than that at the back

Adopted 18 September 1971 | © July 1979 BIS |

BUREAU OF INDIAN STANDARDS
MANAK BHAVAN 9 BAHADUR SHAH ZAFAR MARG
NEW DELHI 110002

3. Material — According to Indian Standard Specification for shuttle blocks

Note — This standard is under preparation Till such time the standard is published material shall be as agreed to between the buyer and the seller

4. Shuttle Accessories — Various accessories used in making shuttle shall preferably conform to the relevant requirements laid down in IS 6268-1971 'Specification for accessories for use in shuttles for plain calico looms'.

Note — If prescribed by the buyer, fibre washer shall be provided under the tip

5. Weight — The weight of a shuttle shall be as agreed to between the buyer and the seller subject to a tolerance of ±5 percent

6. Workmanship and Finish

6.1 The wood for the manufacture of shuttles shall be fully-seasoned [see* IS : 1141 - 1958 Code of practice for seasoning of timber (*tentative*)]

6.2 Shuttles shall be free from knots, cracks and any other defect which is likely to affect the life or usefulness of shuttles

6.3 The outer surface and surfaces where the yarn comes in contact shall be finished smooth

6.4 Angle of shuttle (bevel) shall be between 84 to 87° subject to a tolerance of ± 0·5° on the angle prescribed by the buyer

Note — In case of shuttles intended to be used in conjunction with all metal reeds the angle of shuttle (bevel) shall normally be 90°

6.5 If agreed to between the buyer and the seller, shuttles made of uncompressed wood shall be impregnated with raw linseed oil

7. Balancing of Shuttle — When the shuttle is held between two horizontal frictionless bearings (or thumb nails) so that the shuttle front faces the viewer the shuttle shall tilt towards the back

8. Dropping Test — When the shuttle is vertically dropped with one of its tips facing down from a height of one metre on a cast iron plate the tip shall not get blunt

9. Position of Pirn — The pirn, when in position in a shuttle, shall lie at equidistance from inside opposite walls of the shuttle However, the difference in gap on either side shall not exceed 1 mm.

10. Marking — Mark each shuttle at a suitable place with the following

a) Brand or trade-mark of the manufacturer,

b) Hand of the shuttle whether right hand (*R*) or left hand (*L*), and

c) Code number to trace back history of production

10.1 *Certification Marking* — Details available with the Bureau of Indian Standards

*Since revised

Reprography Unit, BIS, New Delhi, India

AMENDMENT NO. 2 MAY 1985

TO

IS 1794-1971 SPECIFICATION FOR SHUTTLES FOR PLAIN CALICO LOOMS

(First Revision)

(*Page 2, clause 3 with Note*) - Substitute the following for the existing clause with Note

'3. Material - Shuttle blocks conforming to IS 9280-1979 Specification for wooden shuttle blocks for non-automatic looms.'

(TDC 19)

Reprography Unit, BIS, New Delhi, India